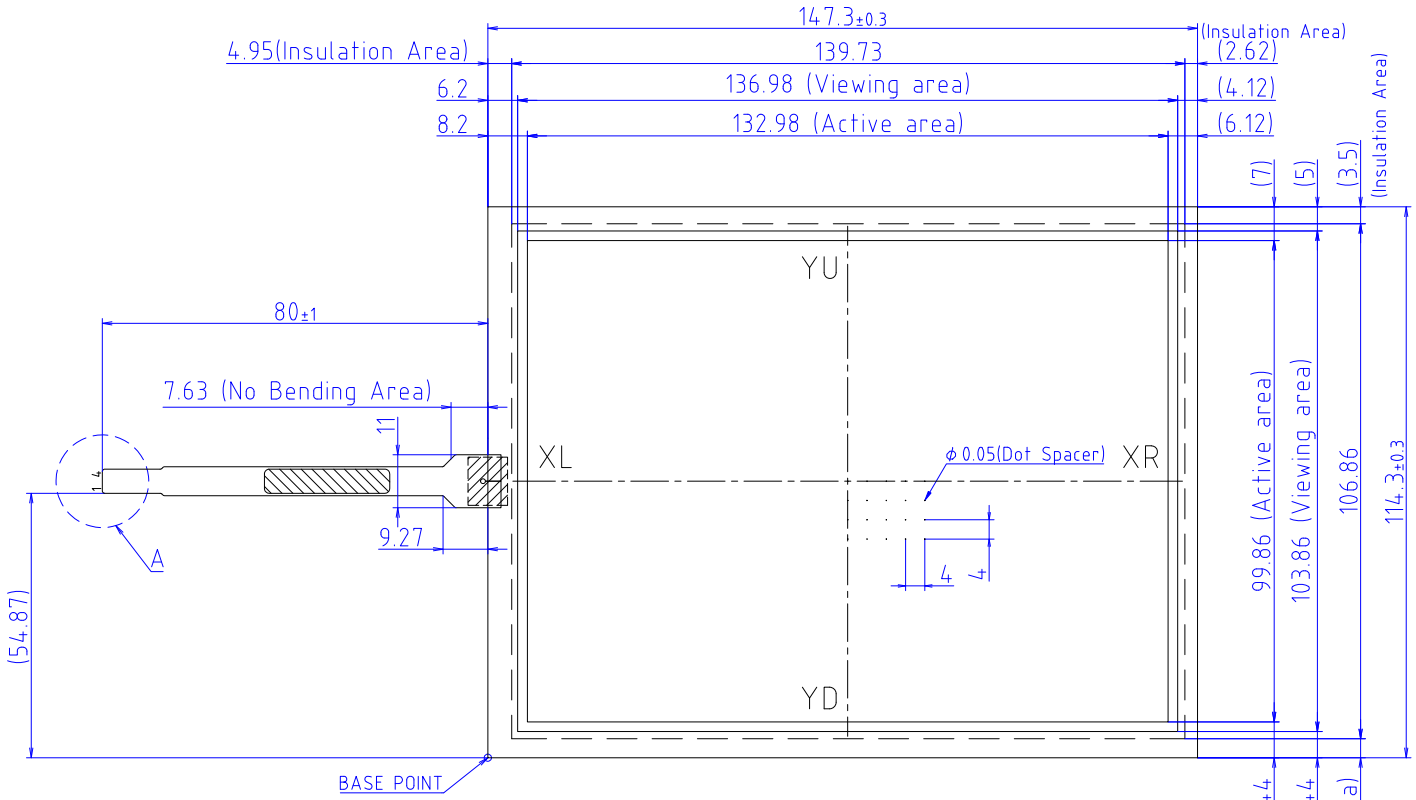


| PIN | OUT |
|---|---|
| 1 | YD |
| 2 | XL |
| 3 | YU |
| 4 | XR |

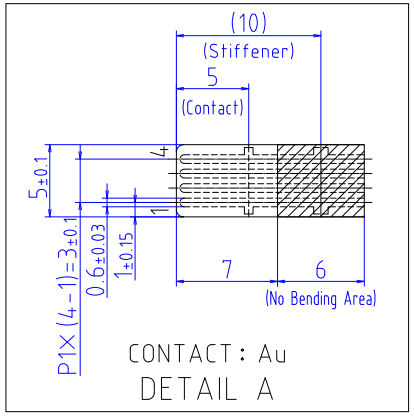


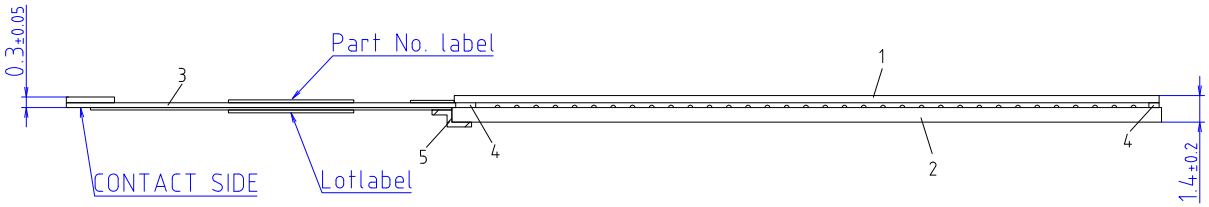


| REMARKS |
|---|
| ○ TOLERANCE=±0.5mm |
| |

| | ITEM |
|---|---|
| 1 | ITO FILM |
| 2 | ITO GLASS |
| 3 | TAIL |
| 4 | ADHESIVE SHEET |
| 5 | PROTECTION TAPE |

Edges and corners of ITO glass may be chamfered without affecting product specification.

| PART No. | SCALE | DATE |
|---|---|---|
| LST-065C080C | NTS | Nov/5/2025 |
| TYPE | UNIT | |
| STANDARD TOUCHSCREEN CIRCUIT DRAWING | mm | DMC Co., Ltd. |