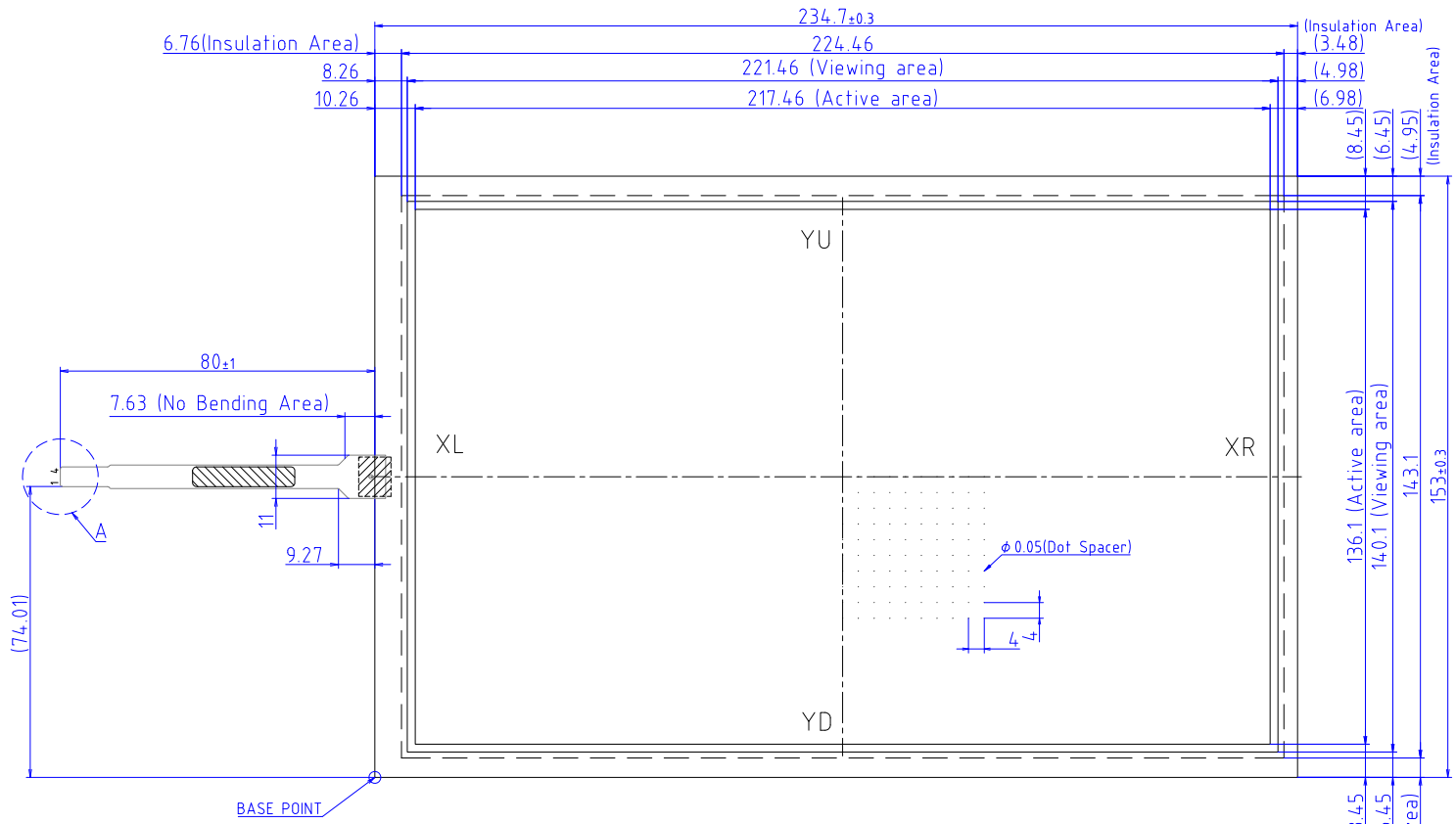

PIN	OUT
1	YD
2	XL
3	YU
4	XR

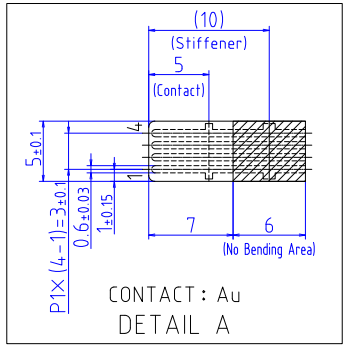

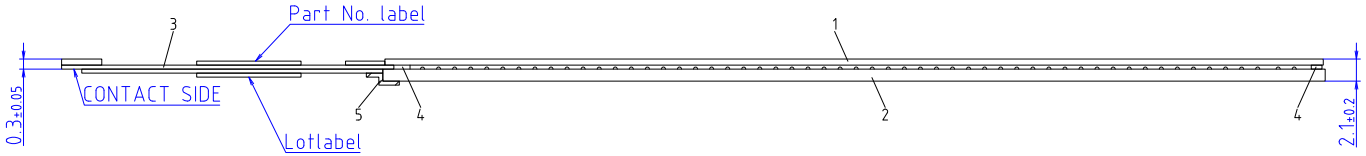

REMARKS
○ TOLERANCE=±0.5mm

	ITEM
1	ITO FILM
2	ITO GLASS
3	TAIL
4	ADHESIVE SHEET
5	PROTECTION TAPE

Edges and corners of ITO glass may be chamfered without affecting product specification.

PART No.	SCALE	DATE
LST-101WC080C	NTS	Nov/5/2025
TYPE	UNIT	
STANDARD TOUCHSCREEN CIRCUIT DRAWING	mm	DMC Co., Ltd.