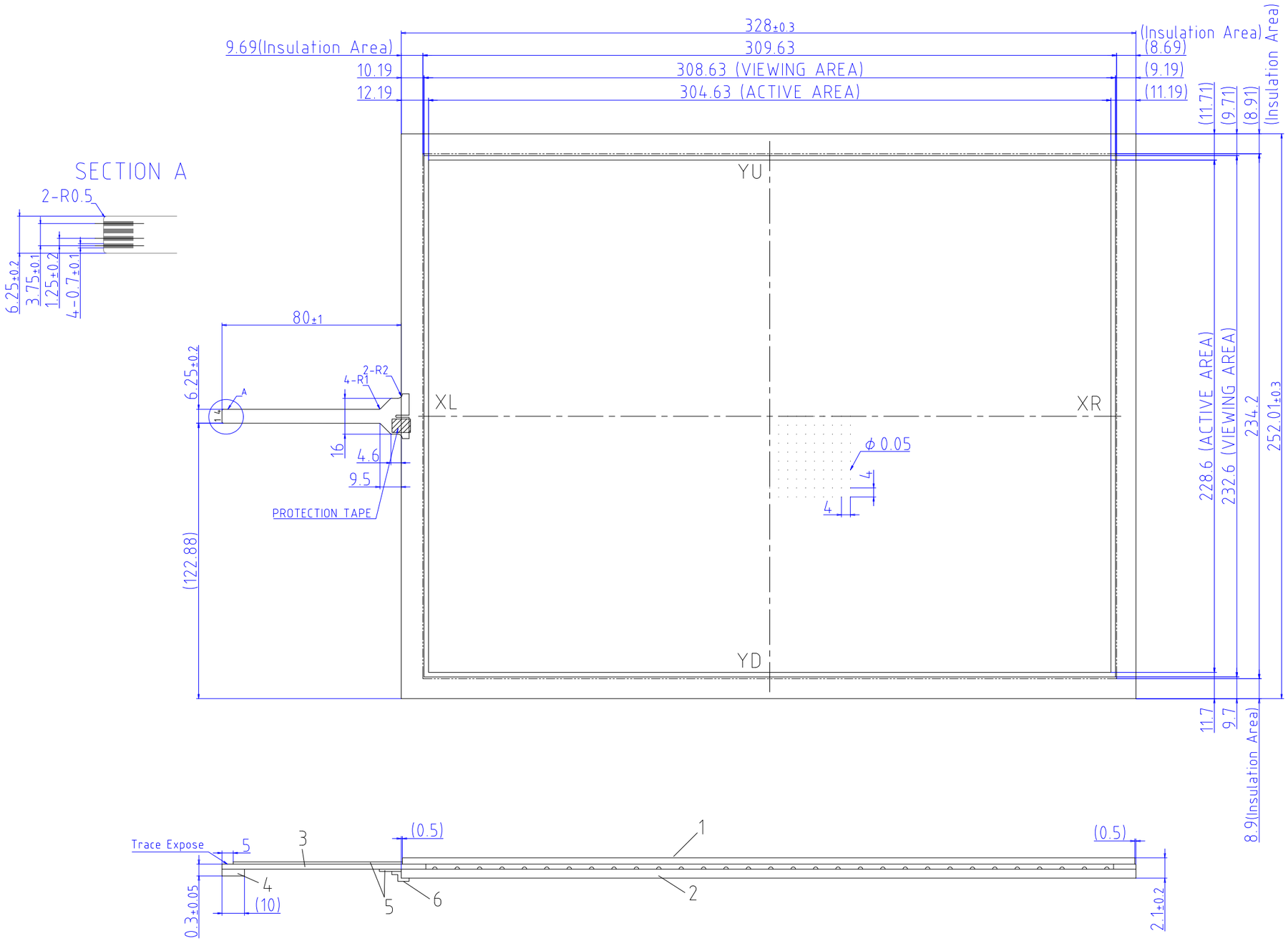

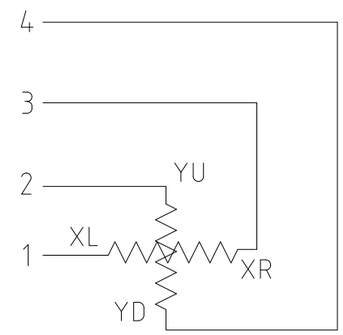

Pin Assignment

	ITEM
1	ITO FILM
2	ITO GLASS
3	TAIL
4	STIFFENER
5	REINFORCEMENT FILM
6	PROTECTION TAPE

TOLERANCE=±0.5mm
EXCEPT WHERE INDICATED
Unit: mm
Edges and corners of ITO glass may be chamfered without affecting product specification.

PART No.	DATE
LST-150B080A	Sep/08/2023
TYPE	
STANDARD TOUCHSCREEN CIRCUIT DRAWING	DMC Co., Ltd.